Product Type: IP67 connector

Product Name:ESF-PS100A16BN

Product Description: Connectors suitable for energy storage modules Color: Black Rated voltage: 1500V DC Rated current: 100A Connection method: crimping Contact type: Socket wire cross-section: 16mm^2 cable outer diameter: 7.1mm to 7.8mm

Product Size

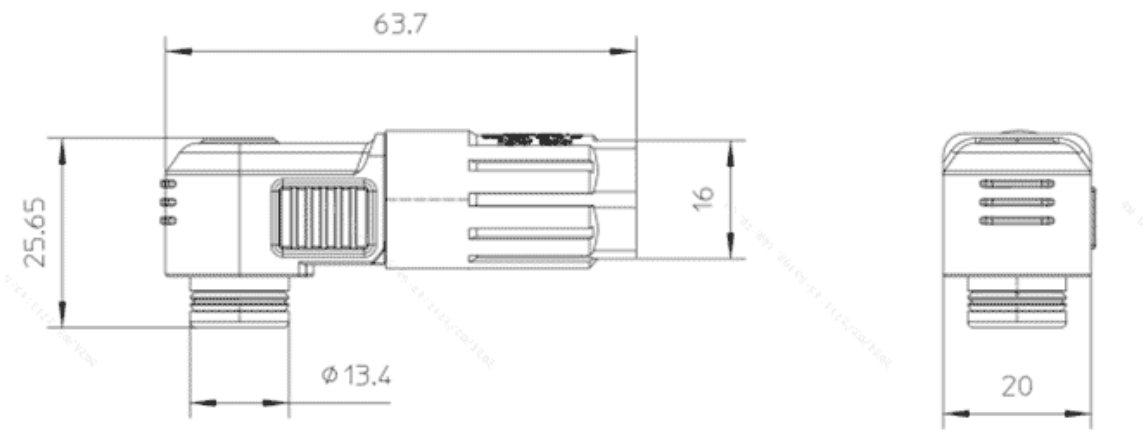

Parameters

SUPU ID	ESF-PS100A16BN
Number of connections	1

Connection method	Crimp
Protection Level	IP67
Operating temperature range	-40°C～125°C
Insulation material	PA
Insulation material group	III
Contact material	Copper alloy
Contact plating	Ag,Plated
Insertion/withdrawal cycles	100
Insertion force	≤75N
Withdrawal force	≥10N

Technical data

IEC Rated Current	100A
IEC Rated Voltage	1500V
Overvoltage category	III
Degree of pollution	3
Rated impulse voltage	12.3KV
Stripping length	20mm±1mm
Rated cross section(AWG)	16mm² （AWG6）
External cable diameter	7.1mm～7.8mm

Commercial data

Order No	ESF-PS100A16BN
Packing unit	1

Minimum order quantity	PCS
Weight per unit (without packaging)	0.98KG
Single piece weight	0.94KG

Ningbo SUPU Electronics Co., Ltd.

Address: No. 150, Xinxing 4th Road, High-tech Industrial Development Zone,
Cixi City, Zhejiang Province, China

Zip code: 315303

Switchboard: +86 574-63288158

Fax: +86 574-63288170

E-mail:supucontact@supu.cn

Service Hotline: 400-626-6336

Wechat

The right to modify data belongs to SUPU.