Product Type: Toggle Switch（TS2 Series）

Product Name:TS2 Series Toggle Switch

Product Description: IP65、IP67

Product Size

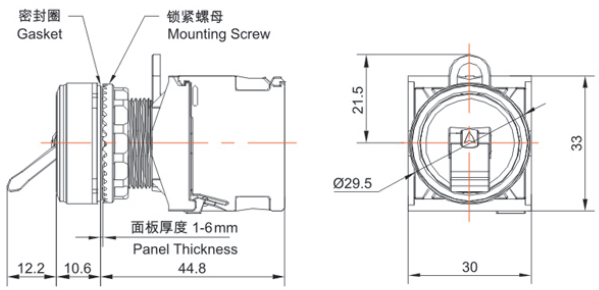

纯平型
Recessed

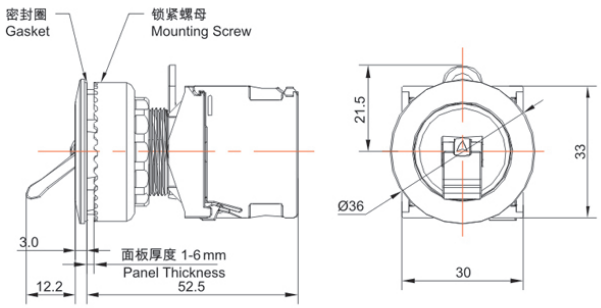

Ningbo SUPU Electronics Co., Ltd.

Address: No. 150, Xinxing 4th Road, High-tech Industrial Development Zone,

Cixi City, Zhejiang Province, China

Ningbo SUPU Electronics Co., Ltd.

Zip code: 315303

Switchboard: +86 574-63288158

Fax: +86 574-63288170

E-mail:supucontact@supu.cn

Service Hotline: 400-626-6336

Wechat

The right to modify data belongs to SUPU.